R&D Carbon

ROUTINE QUALITY CONTROL
CATHODE CORE - VERTICAL
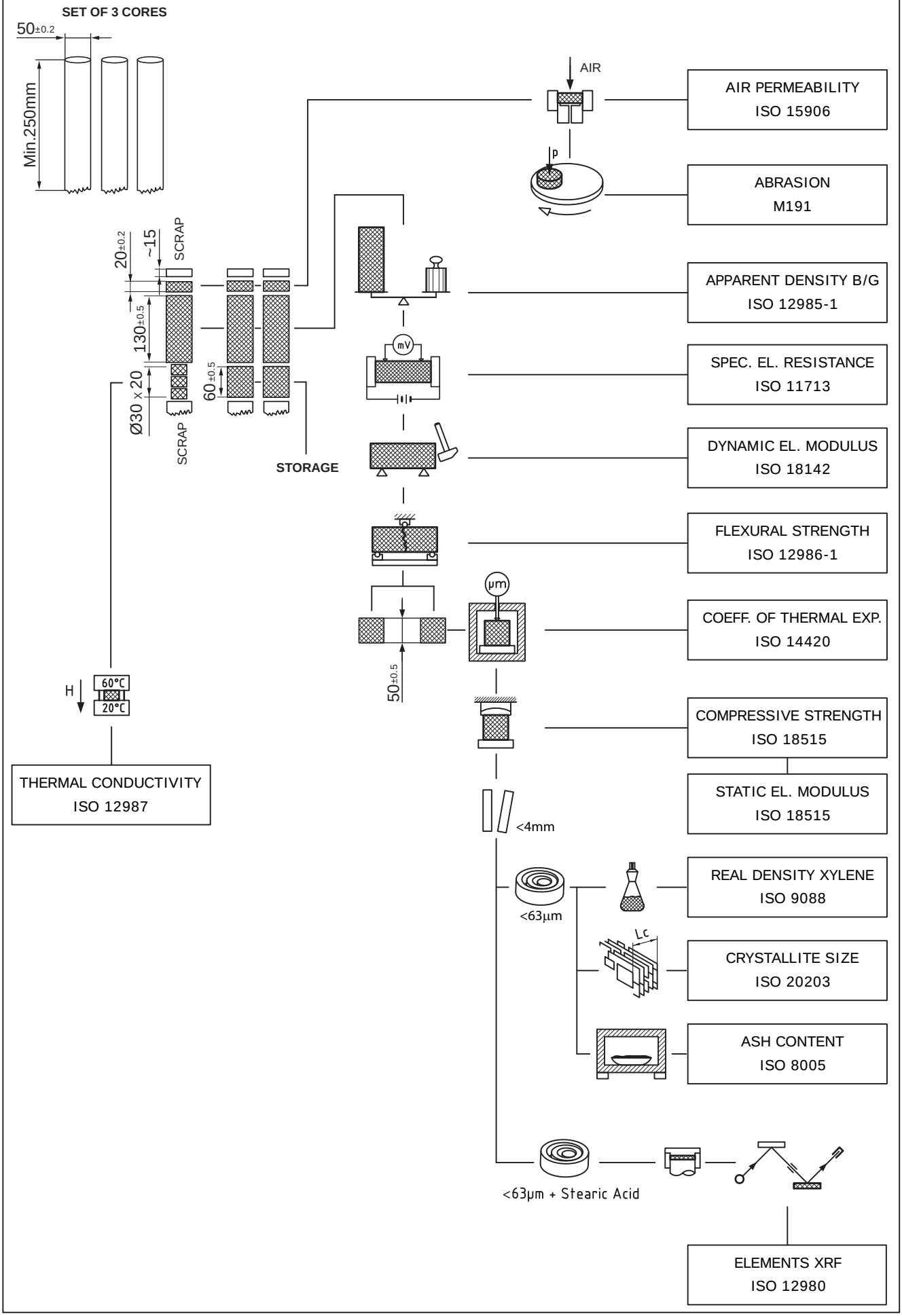
18.05.2017/JW