R&D Carbon

TYPICAL TEST SCHEDULE
BENCHSCALE 20 CYLINDERS
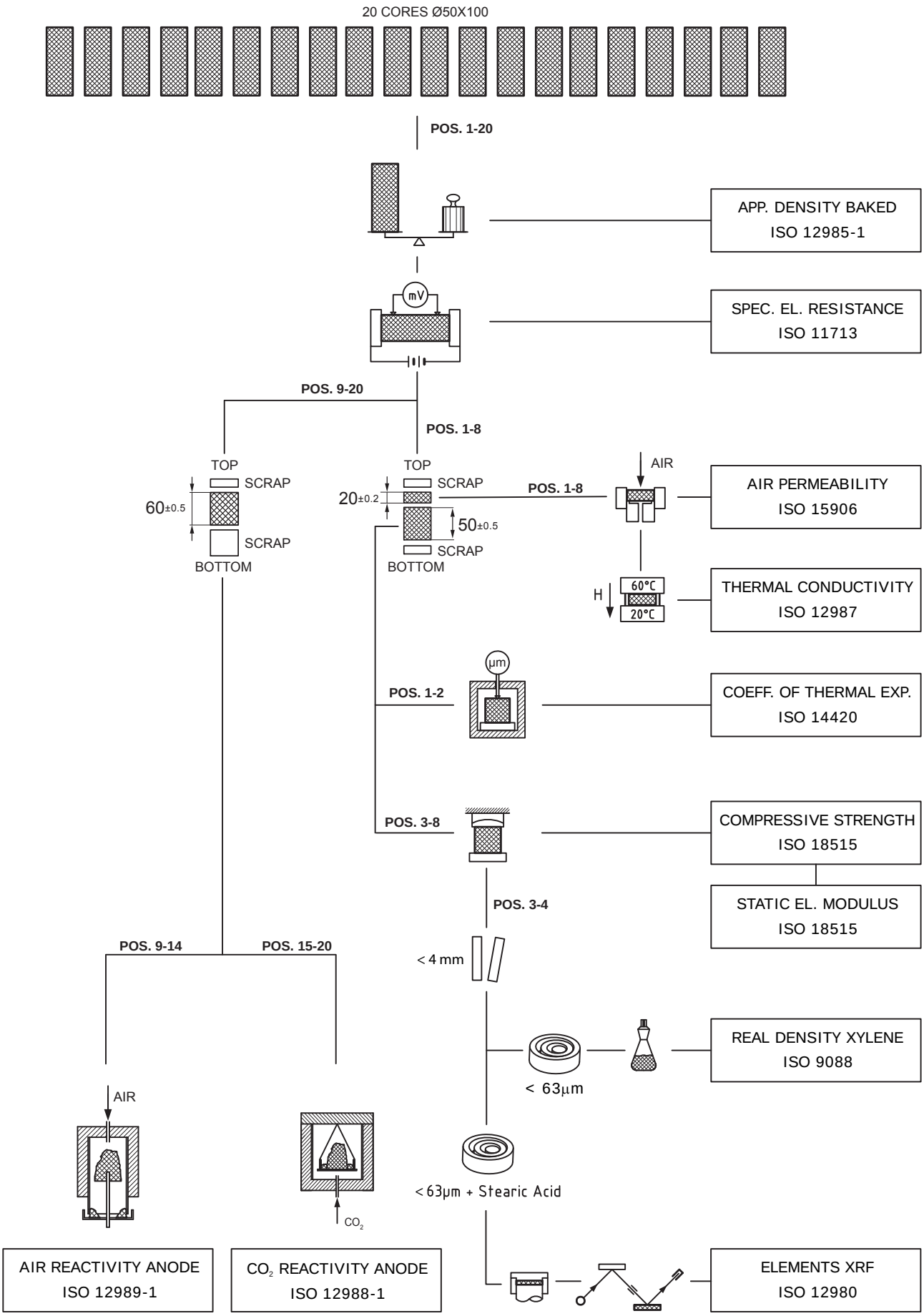
11.05.2017/JW