R&D Carbon

TYPICAL TEST SCHEDULE

SÖDERBERG PASTE ALUMINIUM
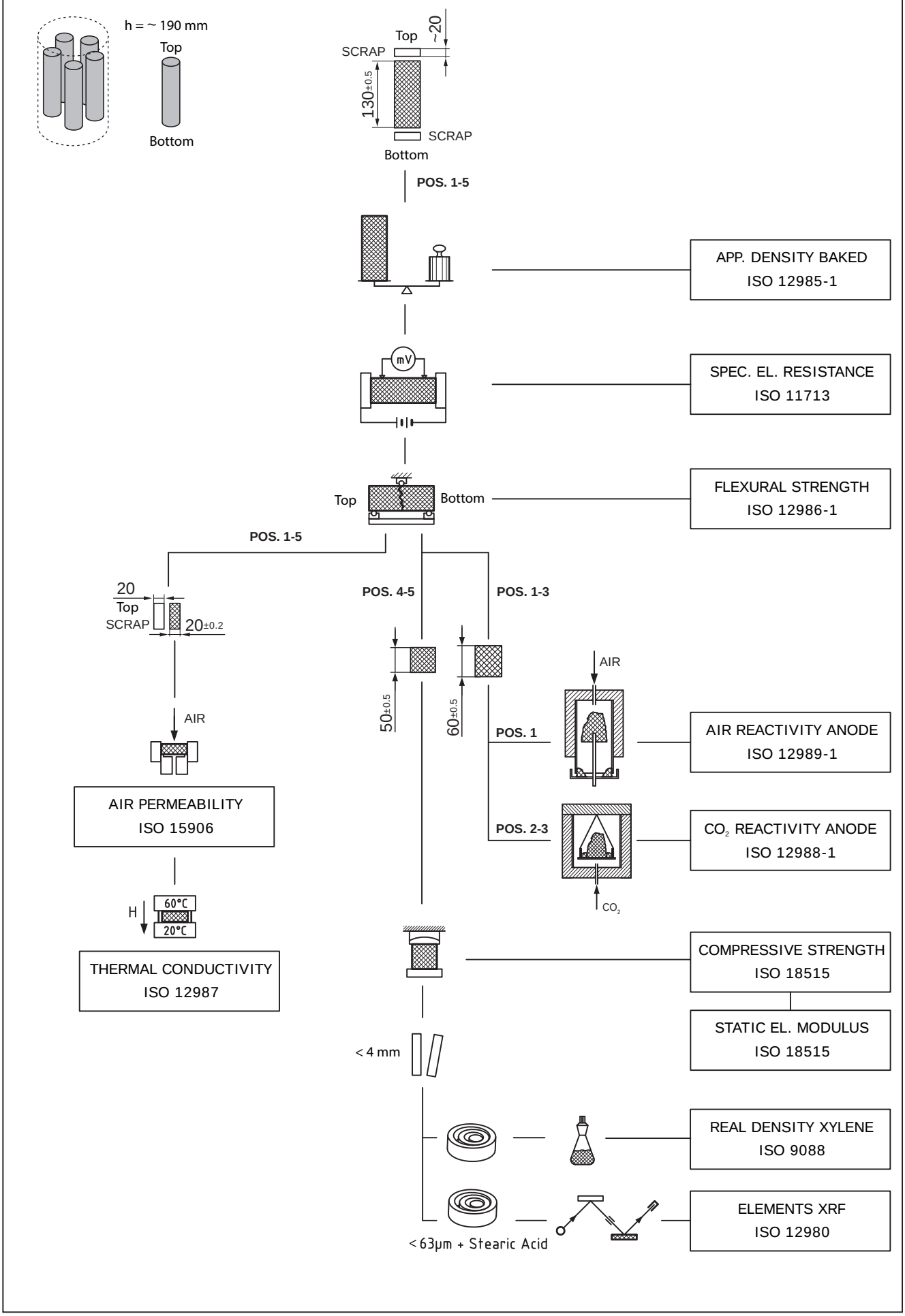
12.05.2017/JW